PRIMEX
Product Specifications

P1000M w/Service Divider

12 Fiber/Override Lock (P1000MFSC-TOG12SASD)

1. SUMMARY

The Primex Wave P1000MFSC with Service Divider is a mid-size, 12 fiber, splice and connect enclosure that cleanly and easily separates the splice tray and cross-connect adapters for multi-tiered installations.

The design incorporates Primex fiber splice trays, fan out kit and a unique adjustable fiber management system for efficient and compact installation. Access is restricted to the splice compartment via a Torx™ screw and it includes snap and override locks for secure access.

2. DIMENSIONS

Inside: H 10.2"/W 8.7"/D 2.1"
Outside: H 13.9"/W 11.5"/D 3"

3. FEATURES & BENEFITS

- Compact, low profile design provides simple fiber splice and connect point for MDU applications.
- Integrated ratchet cable spool allows for quick and easy slack storage release of outgoing cables without disconnection.
- Pre-connectorized with single mode G.652.D fiber to splice with incoming fiber.
- Equipped with Primex 12 fiber trays and fan out kits for compact, efficient splicing.
- Low profile 90° cable clips and flat drop strain relief system for efficient cable management.
- Quick release splice mount allows for rapid removal and installation of splice tray.
- High quality UV-protected PVC made in North America for long-lasting fiber protection in demanding weather conditions.
- External wall mounting tabs that eliminate the need to drill through the box, allowing for quick and easy deployment.

4. APPLICATIONS

- FTTH for multi dwelling units (MDU)

5. CONFIGURATIONS

Part #	Part Name	Description
125-1806	P1000MFSC-TOG12SASD	Override lock, gasket, 12x SC/APC, Fiber Tray, 4x grommets, 2x CClips, ground lug, fiber cradle, strain relief system

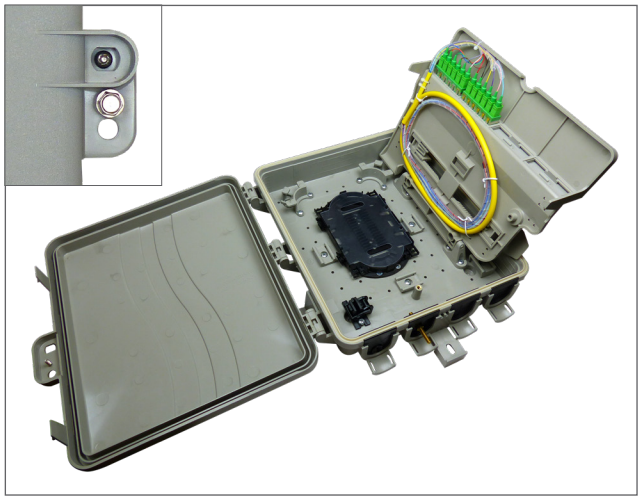

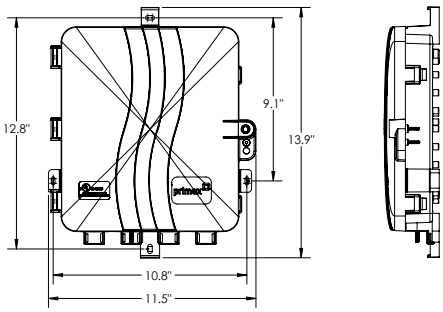

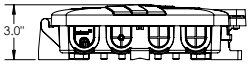

FOR MORE INFORMATION CONTACT:
T 1.604.881.7875 F 1.604.881.7835
www.primex.com

primex Fit everything. Together.